LOS VILOS

B2027-PBR

TROY LIGHTING

The magic of Los Vilos stems from its clever construction. Combining elongated lines with statement stone, this torch-like sconce features a grey travertine backplate with a concave center. This creates the illusion that the sconce is levitating in front of the stone. A simple white linen shade diffuses light across these enchanting features.

*Due to the one-of-a-kind nature of the medium, exact colors and patterns may vary slightly from the image shown.

FINISHES

PATINA BRASS



DIMENSIONS / SPECS

Height: 27.25"
Width/Diameter: 6.5"
Canopy/Backplate: 5.25"
Product Weight: 5.5lb
Extension: 7"
Top to Center: 12.5"
Canopy/Backplate Shape: Round
Sloped Ceiling Compatible: No
Living Finish: No
Uplight Only: Yes

Shade 1: Textile
Shade 1 Finish: Off White Linen
Shade 1 Top Width: 4.5"
Shade 1 Bottom L/W: 0" / 6.5"
Shade 1 Height: 8"

ELECTRICAL

Bulb 1
Bulb Included: No
Socket: E26 Medium Base
Bulb Type: A19
Max Wattage: 15
Bulb Quantity: 1
Wire Length: 7"
Cord Type: B & W TEFLON W/ GROUND WIRE
Gem Box Required (2"x3"): No
Dark Sky: No
Convertible: No

Voltage:
UL Rating: cUL Damp
Gem Box: Not Required

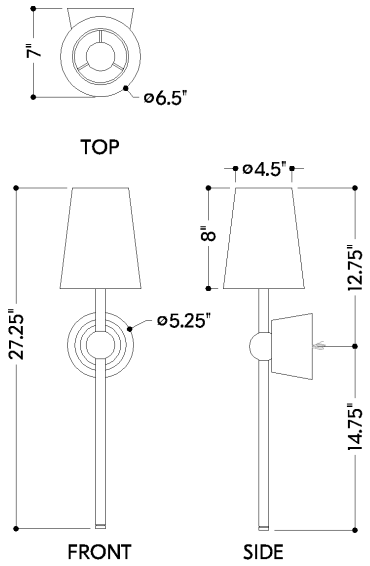

SHIPPING

Carton 1: 19" x 10" x 9"
Carton 1 Weight: 9lb
Shipping Method: Ground
Country of Origin: VN